1) TOP PORTION OF FTP SHALL HAVE A REFLECTIVE BLUE BACKGROUND WITH WHITE REFLECTIVE SYMBOL AND BORDER.

2) BOTTOM PORTION SHALL HAVE A REFLECTIVE WHITE BACKGROUND WITH BLACK OPAQUE LEGEND AND BORDER.

3) FTP 26 MAY BE FABRICATED ON ONE PANEL OR TWO.

NOTES:

1) CONTRACTOR SHALL USE THERMOPLASTIC FOR MARKINGS UNLESS OTHERWISE SPECIFIED ON PLANS.

2) PAVEMENT MARKINGS SHALL CONFORM TO BROWARD COUNTY TRAFFIC ENGINEERING STANDARDS LATEST EDITION. THE "MANUAL OF UNIFORM TRAFFIC CONTROL DEVICES FOR STREETS AND HIGHWAYS" AND "THE FLORIDA DEPARTMENT OF TRANSPORTATION ROADWAY AND TRAFFIC DESIGN STANDARDS."

3) ALL SIGNS SHALL BE HIGH INTENSITY.

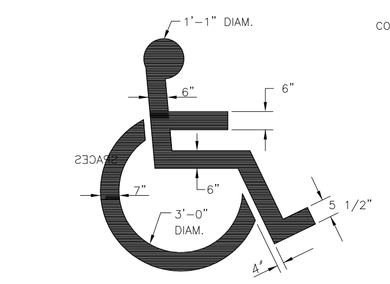

SYMBOL SHALL BE PAINTED WITH HIGHWAY WHITE PAINT AND TO THE DIMENSIONS SHOWN.

SYMBOL PAINT DETAIL

N.T.S.

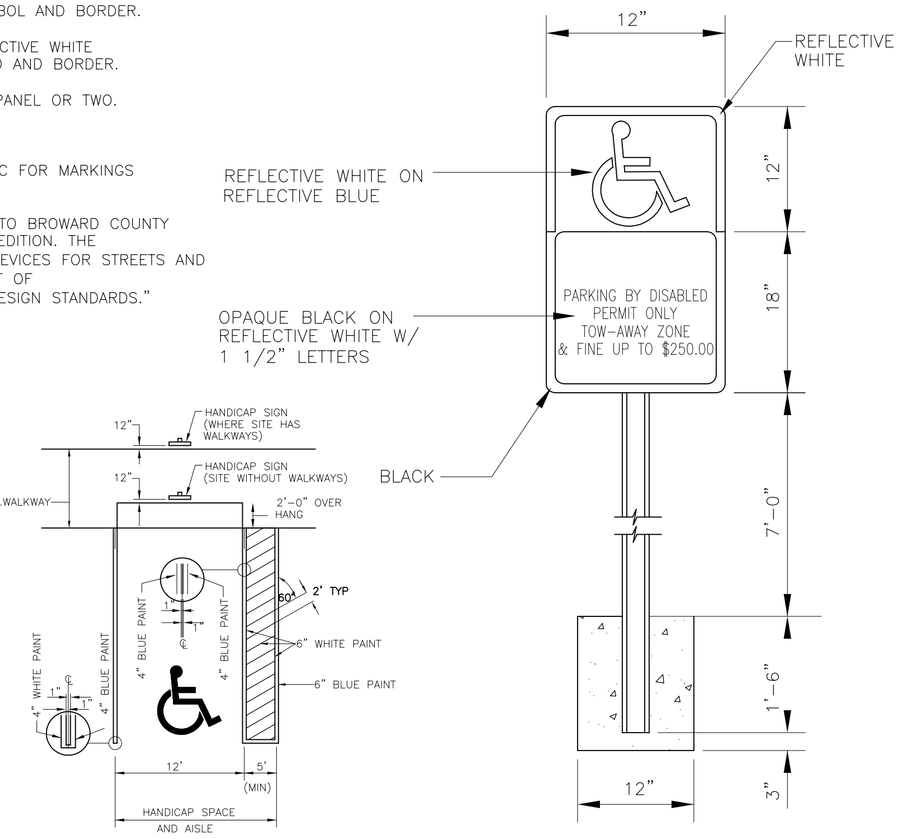

TYPICAL HANDICAP PARKING

N.T.S.

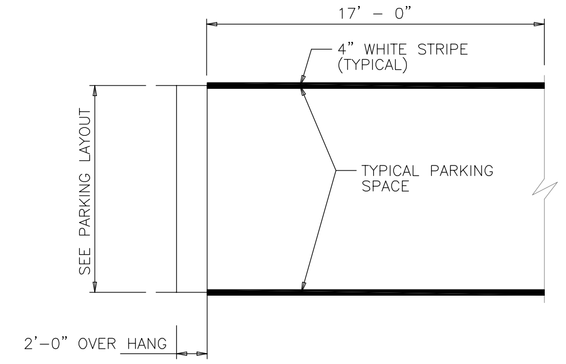

TYPICAL PARKING SPACE

N.T.S.

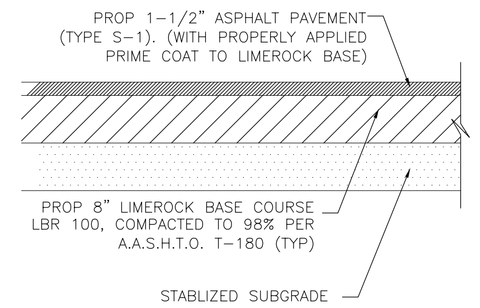

TYPICAL SECTION

N.T.S.

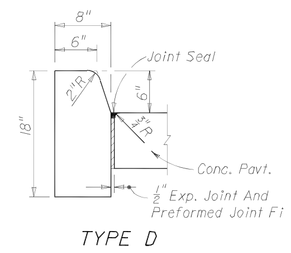

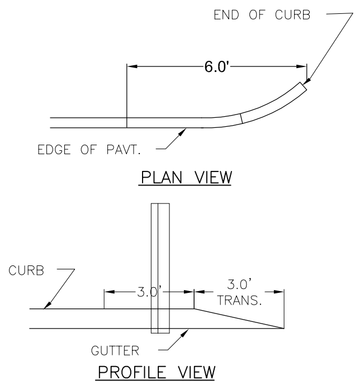

CURB TYPE "D" FLARED END

N.T.S.

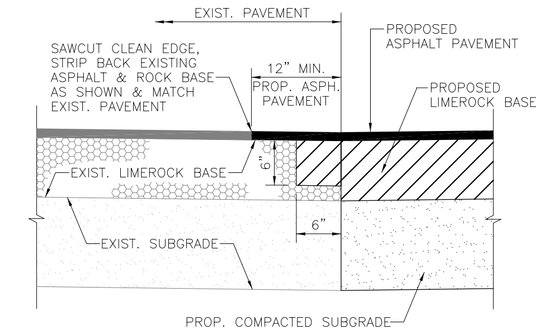

PAVEMENT CONNECTION DETAIL

N.T.S.

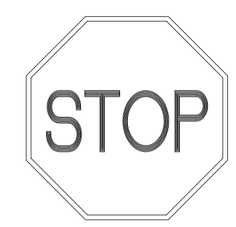

R1-1
30"x30"

TABLE OF SIDEWALK JOINTS	
TYPE	LOCATION
"A"	P.C. AND P.T. OF CURVES, JUNCTION OF EXISTING AND NEW SIDEWALKS
"B"	5' - 0" CENTER TO CENTER ON SIDEWALKS.
"C"	WHERE SIDEWALKS ABUTS CONCRETE CURBS, DRIVEWAYS AND SIMILAR STRUCTURES.

TABLE OF SIDEWALK THICKNESS - "T"	
LOCATION	"T"
RESIDENTIAL AREAS	4"
AT DRIVEWAYS AND OTHER AREAS	6"

NOTE: * AT THE DISCRETION OF ENGINEER.

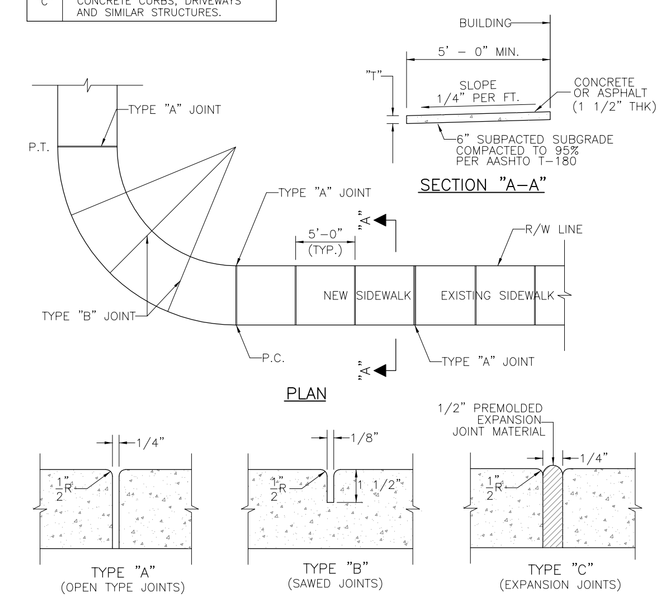

SIDEWALK JOINTS

N.T.S.

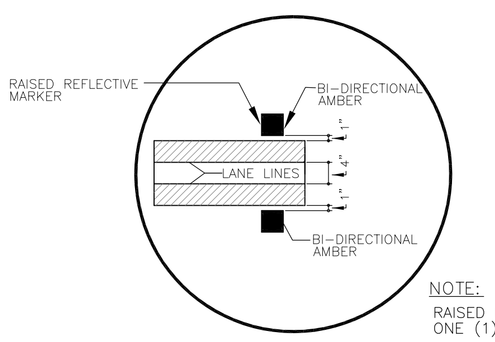

NOTE:
RAISED PAVEMENT MARKERS SHALL BE SET ONE (1) INCH OUTSIDE OF LINE.

DOUBLE YELLOW

N.T.S.

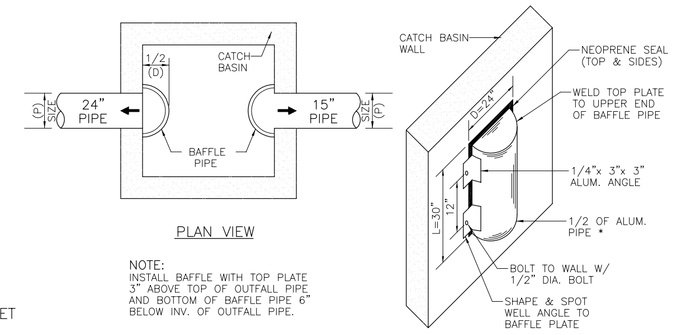

NOTE:
INSTALL BAFFLE WITH TOP PLATE 3" ABOVE TOP OF OUTFALL PIPE AND BOTTOM OF BAFFLE PIPE 6" BELOW INV. OF OUTFALL PIPE.

POLLUTION CONTROL BAFFLE TYPICAL DETAIL

N.T.S.

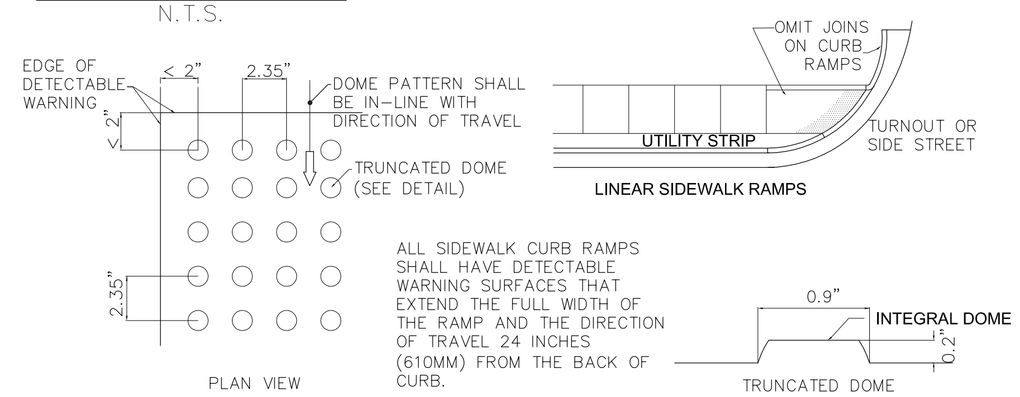

CURB RAMP DETECTABLE WARNING

N.T.S.

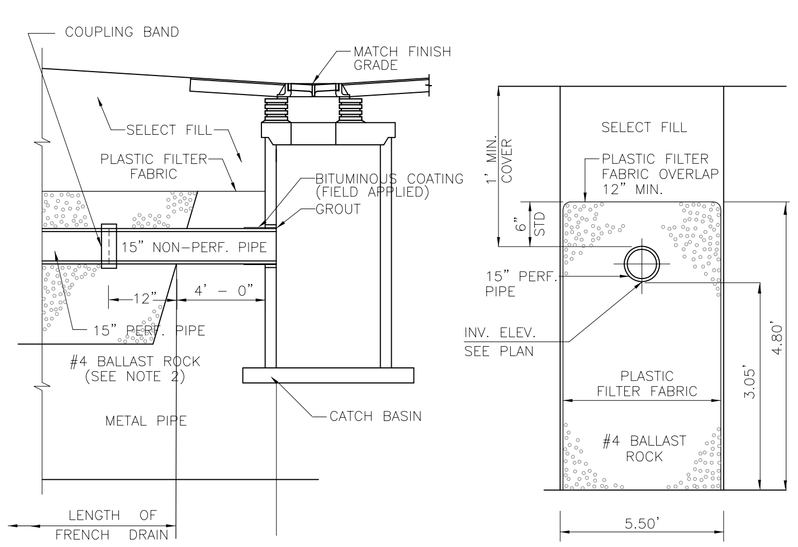

NOTES:

1. PLASTIC FILTER FABRIC PER F.D.O.T. STD. INDEX # 285 SHALL BE USED AT EACH SIDE AND ON TOP, AND AT EACH END OF FRENCH DRAIN TRENCH.

2. AFTER THE BALLAST ROCK HAS BEEN PLACED TO THE PROPER ELEVATION IT SHALL BE CAREFULLY VIBRATED OR COMPACTED IN ORDER TO ALLOW FOR INITIAL SETTLEMENT THAT MAY OCCUR. IF IT DOES TAKE PLACE, ADDITIONAL BALLAST ROCK WILL BE ADDED TO RESTORE THE BALLAST ROCK TO THE PROPER ELEVATION SO THAT THE EXFILTRATION TRENCH CAN BE COMPLETED IN ACCORDANCE WITH THE DETAIL.

TYPICAL DETAIL - EXFILTRATION TRENCH

N.T.S.

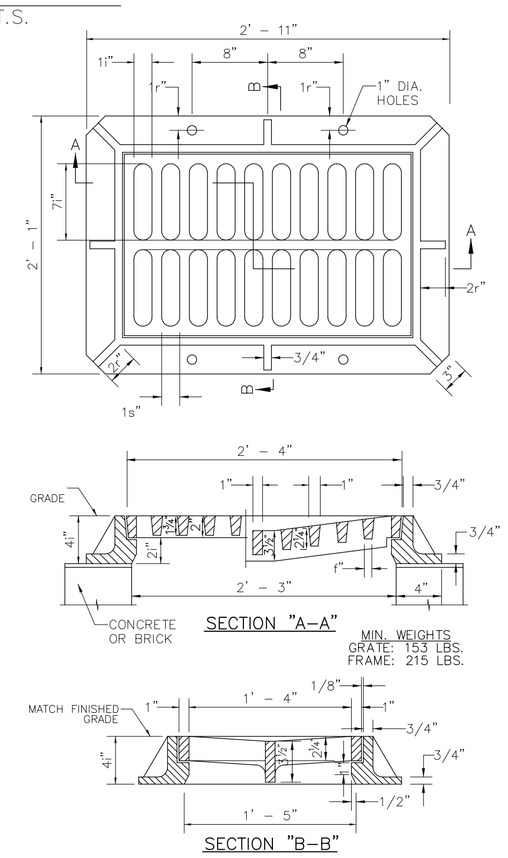

TYPICAL DETAIL - FRAME AND GRATE

N.T.S.

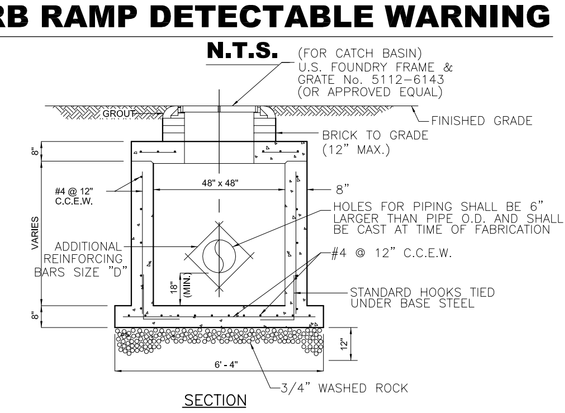

PRECAST DRAINAGE CATCH BASIN

N.T.S.

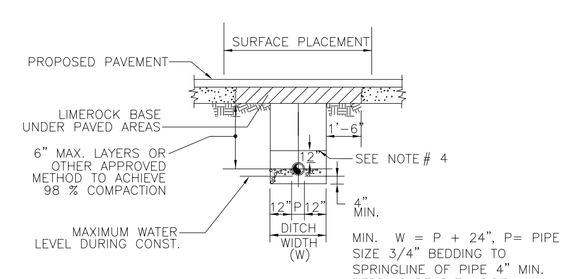

NOTE

1. REPLACED BASE MATERIAL OVER DITCH SHALL BE 12" COMPACTED THICKNESS.
2. BASE MATERIAL SHALL BE PLACED IN TWO OR THREE LAYERS AND EACHLAYER THOROUGHLY ROLLED AND TAMPED TO MAXIMUM DENSITY (98 %) PER AASHTO T-180.
3. ASPHALT CONCRETE PAVEMENT JOINTS SHALL BE MECHANICALLY SAWED.
4. MECHANICAL COMPACTION NOT ALLOWED BELOW THIS LEVEL.

TRENCH DETAIL

N.T.S.

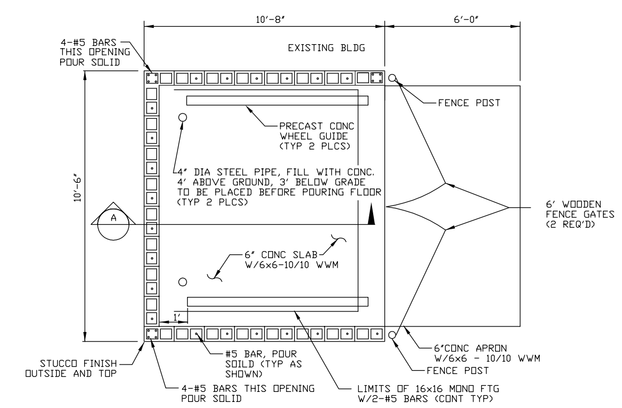

DUMPSTER AREA PLAN

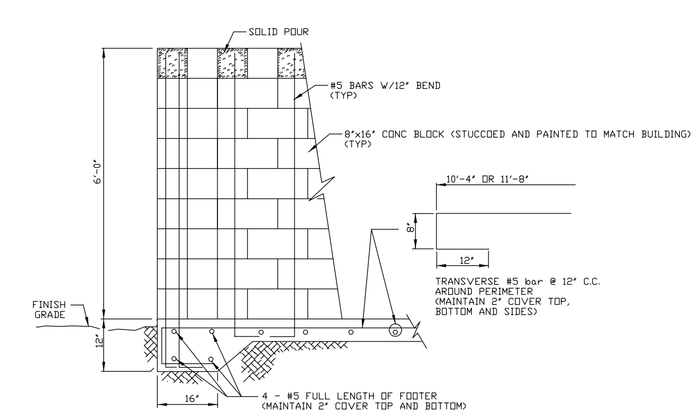

ELEVATION A-A (TYPICAL SECTION)

DUMPSTER DETAIL

N.T.S.

GATOR ENGINEERING CONSULTANTS, P.A.
10620 GRIFFIN ROAD, SUITE 102
COOPER CITY, FL. 33328
TEL: (954) 434-5905 FAX: (954) 434-5904
CERTIFICATE OF AUTHORIZATION NUMBER 5287

SEAL

DATE:
REGINA BOBO-JACKSON, P.E.
FL P.E. NO.: 38550

REVISIONS

No.	DATE	DESCRIPTION

NEW LIFE CHURCH MIRACLE CENTER
6136 VAN BUREN STREET
HOLLYWOOD, FL 33023

GEC PROJECT NO. : 08041
DATE : 05-03-11
SCALE : AS SHOWN
DESIGNEG BY : R.B.J.
DRAWN BY : L.B.
CHECKED BY : R.B.J
APPROVED BY : R.B.J

SHEET TITLE

SITE DETAILS

C3 OF 3

P:\Project Files\08041- New Life Church\CIVIL\Civil.dwg 12/22/2008 2:52:22 PM EST